Entry Light Timer System

– All Models

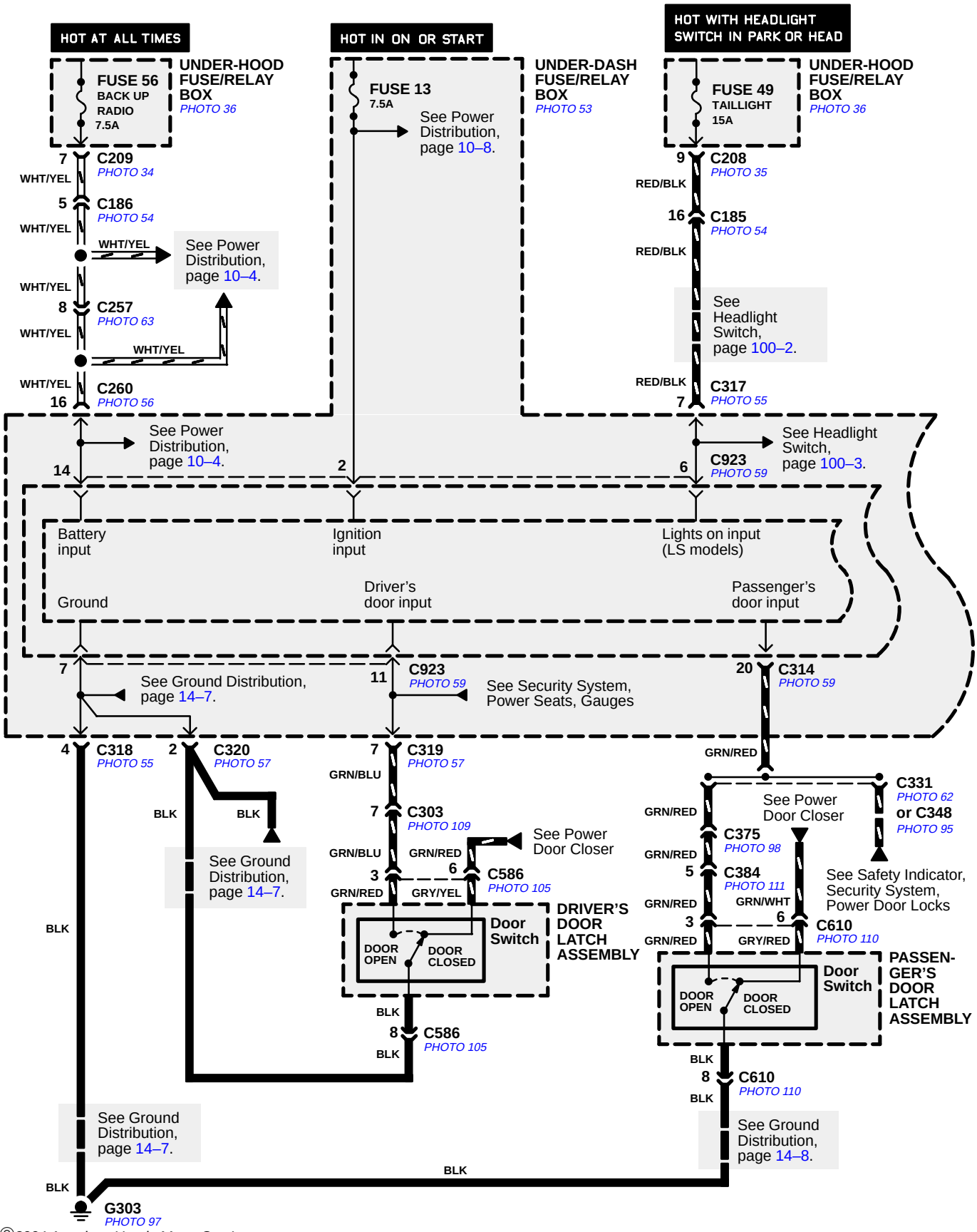

©2004 American Honda Motor Co., Inc.